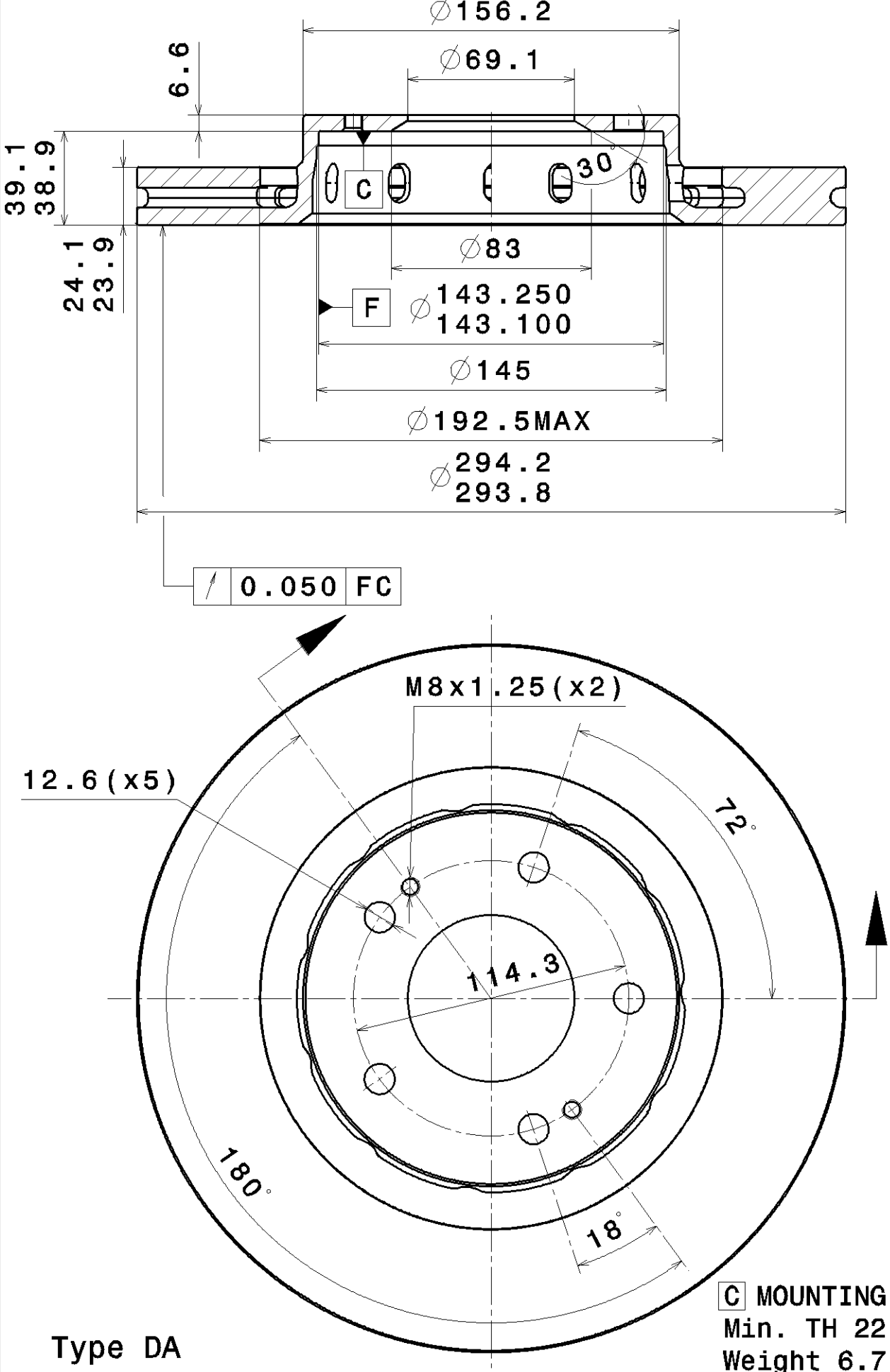
∅156.2
∅69.1
6.6
39.1
38.9
24.1
23.9
C
30°
∅83
F
∅143.250
143.100
∅145
∅192.5MAX
∅294.2
293.8
0.050 FC
M8x1.25(x2)
12.6(x5)
72°
114.3
180°
18°
C MOUNTING FACE
Min. TH 22.4 mm
Weight 6.7 Kg
Type DA