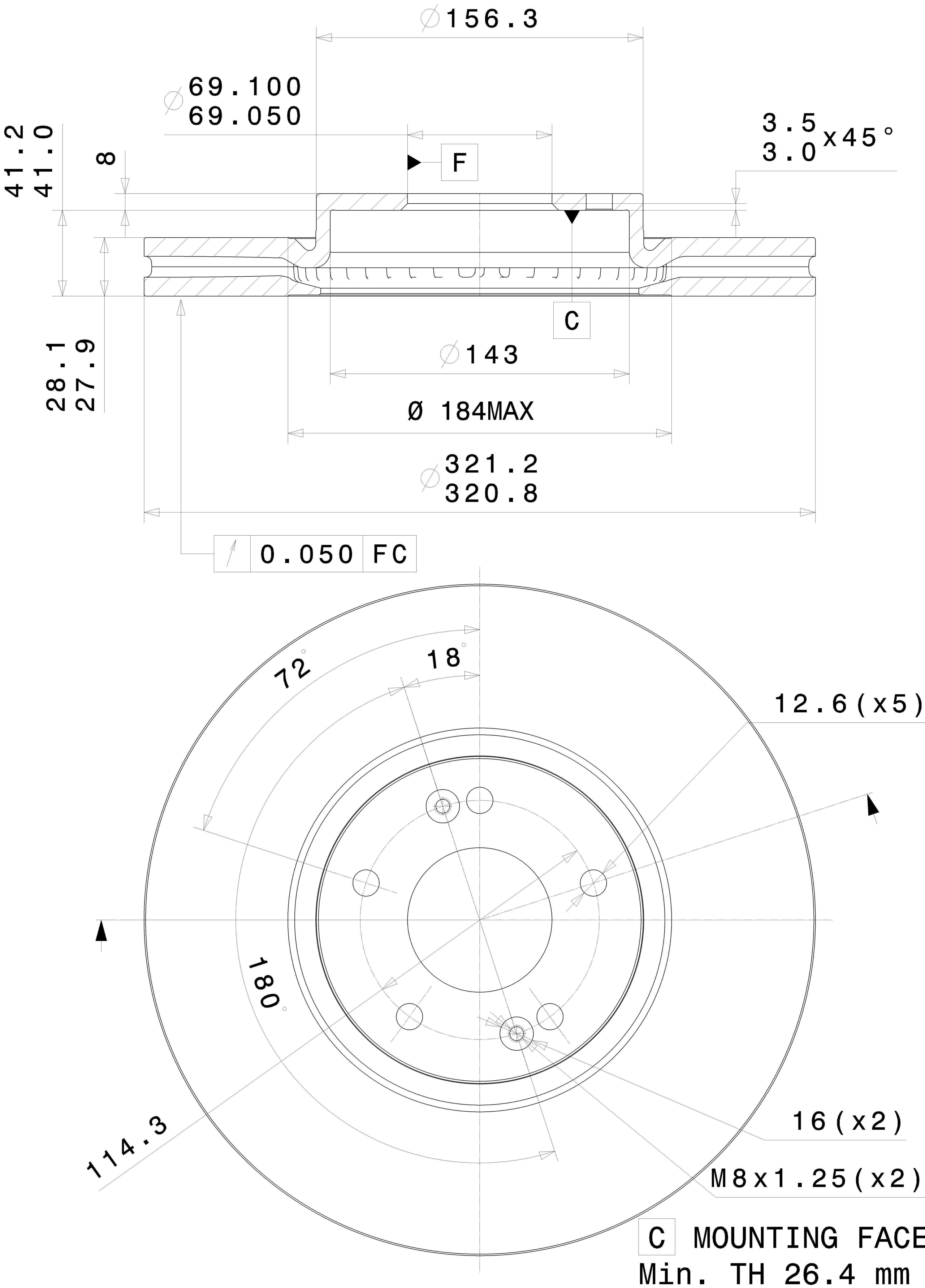

C MOUNTING FACE

Min. TH 26.4 mm

Weight 10.3 Kg

Type DA