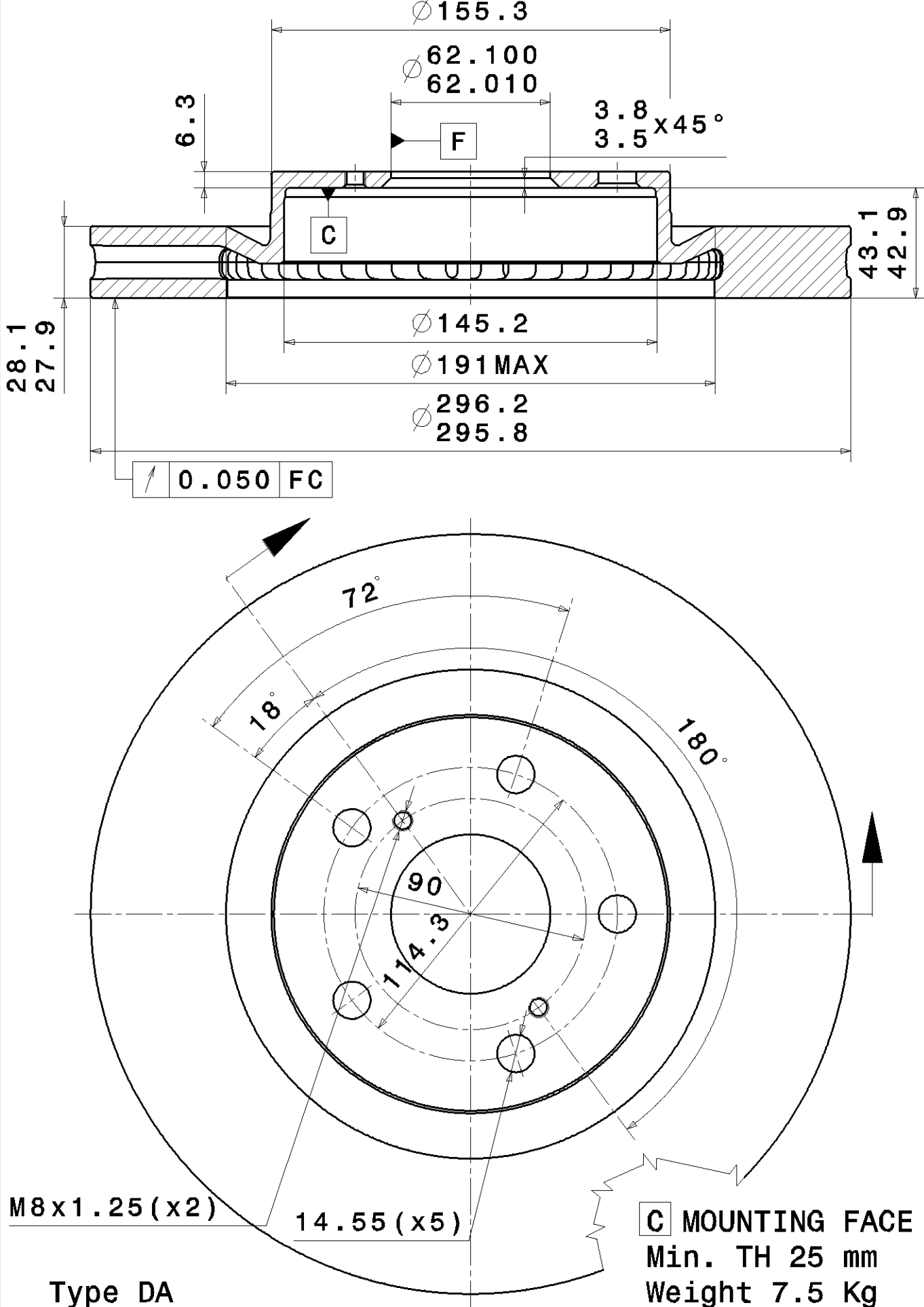
∅155.3
∅62.100
62.010
6.3
3.8
3.5
x45°
F
C
43.1
42.9
28.1
27.9
∅145.2
∅191MAX
∅296.2
295.8
0.050 FC
72°
18°
180°
90
114.3
M8x1.25(x2)
14.55(x5)
C MOUNTING FACE
Min. TH 25 mm
Weight 7.5 Kg
Type DA