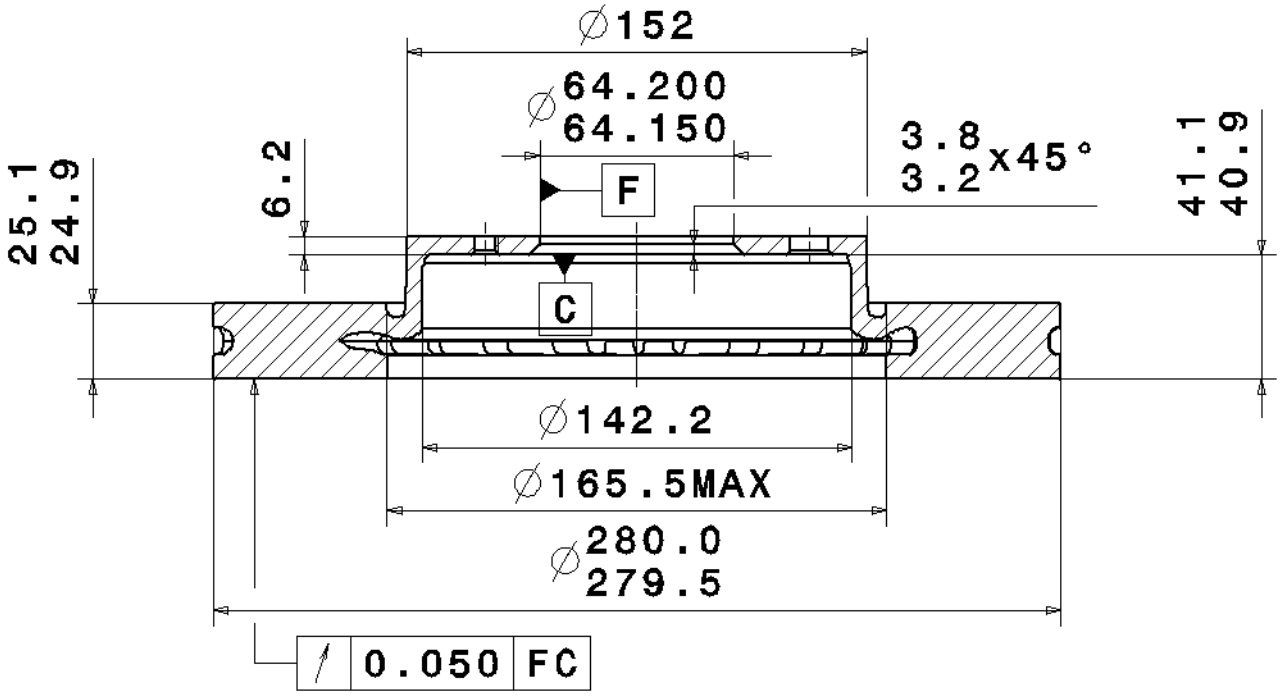

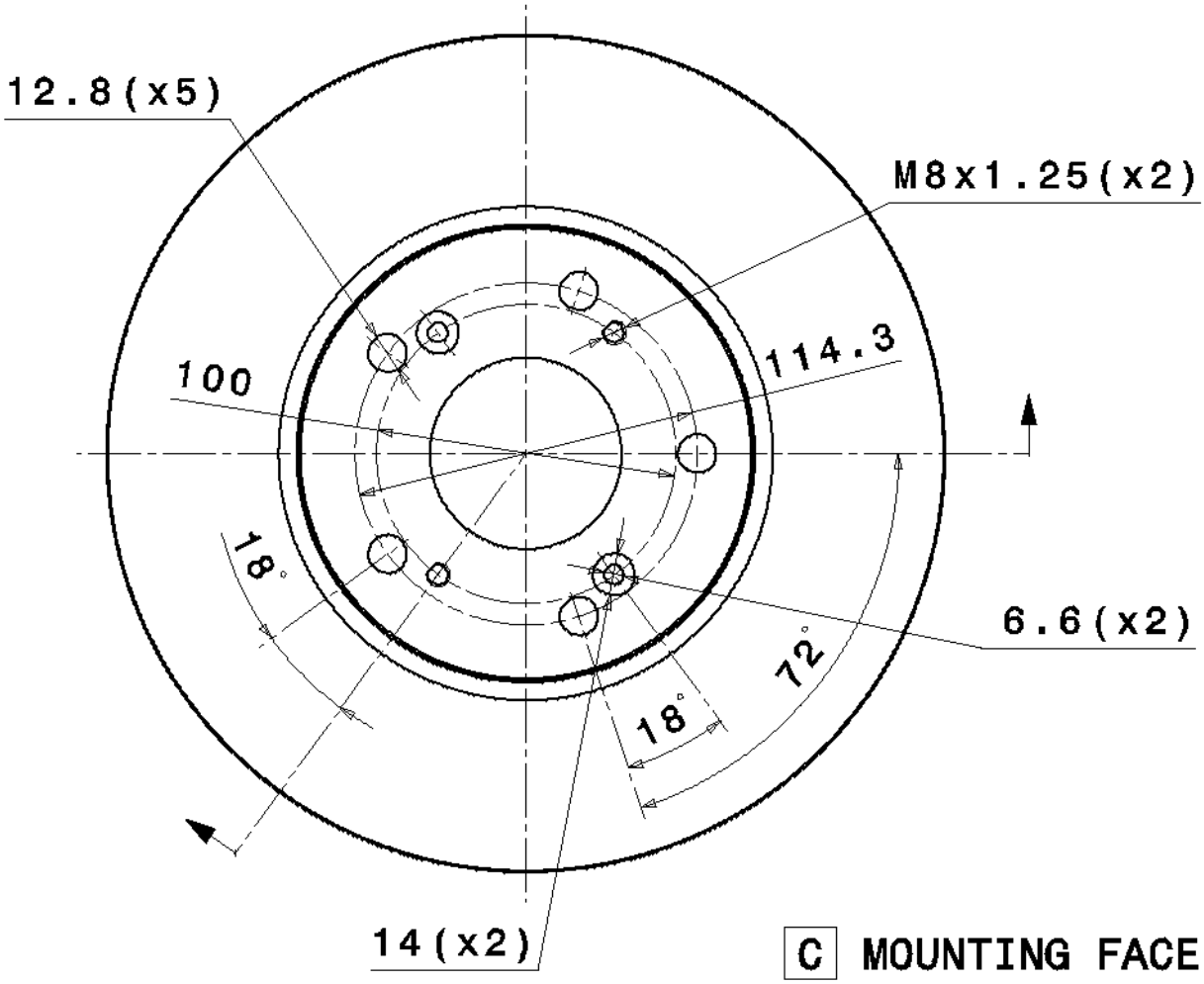

C MOUNTING FACE
Min. TH 23 mm
Weight 6.9 Kg

Type DA