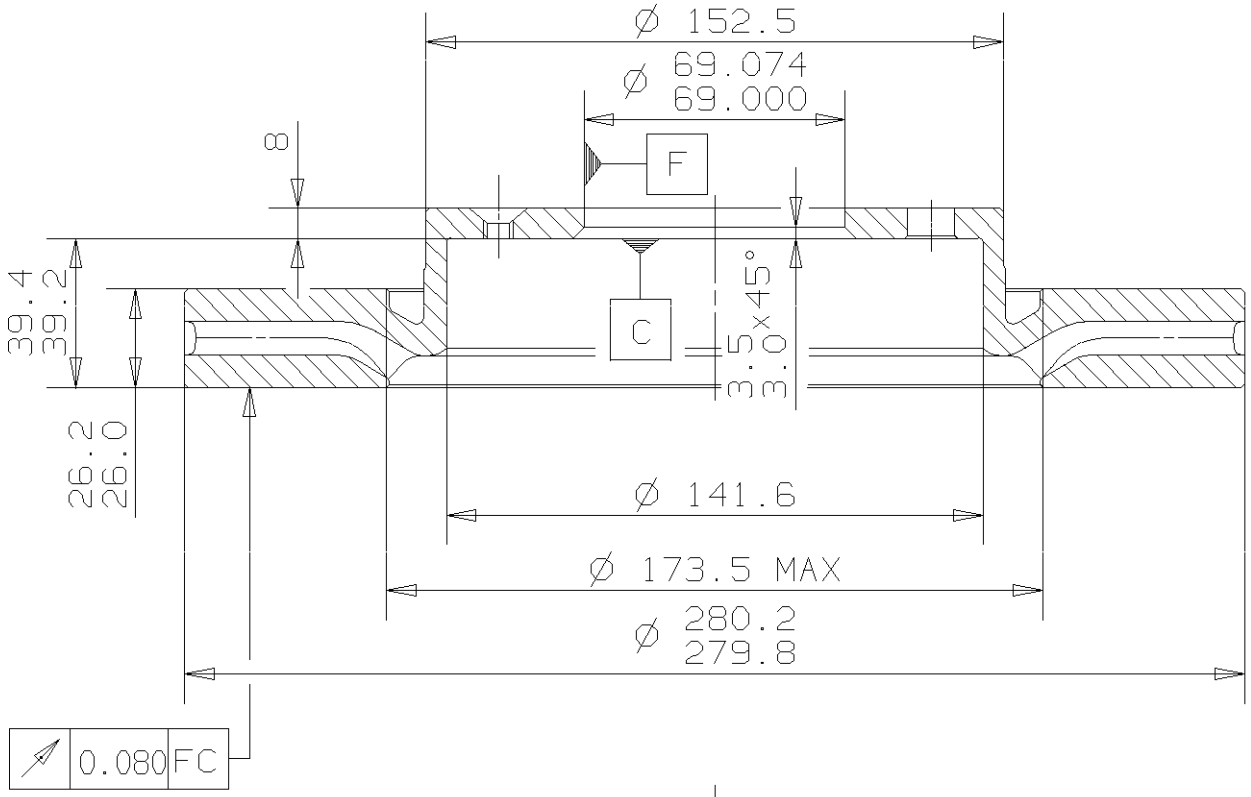

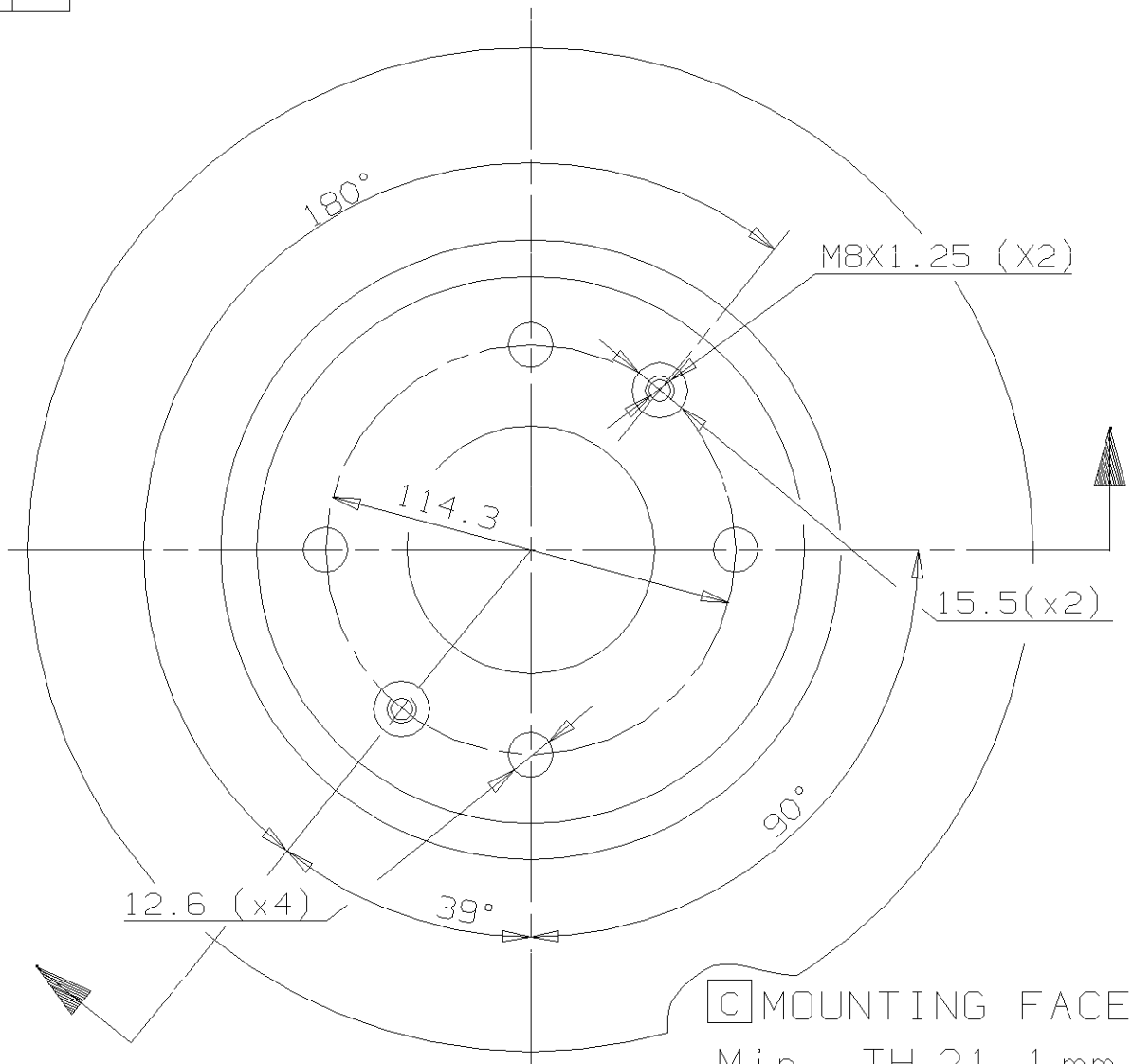

C MOUNTING FACE
Min. TH 21.1 mm
Weight 7 Kg

Type DA