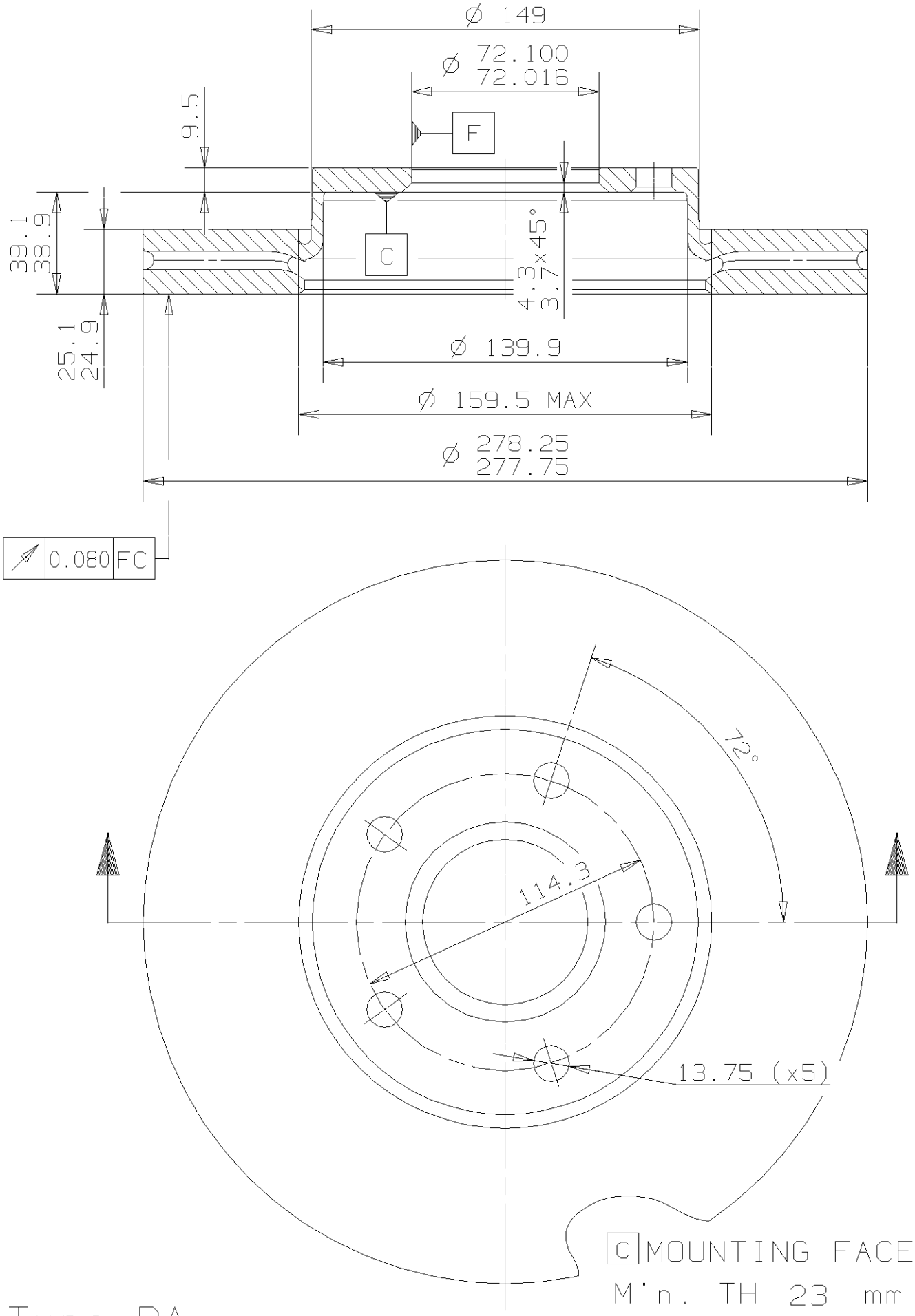
Ø 149
Ø 72.100
72.016
9.5
F
39.1
38.9
C
4.3
3.7 x 45°
25.1
24.9
Ø 139.9
Ø 159.5 MAX
Ø 278.25
277.75
0.080 FC
72°
114.3
13.75 (x5)
C MOUNTING FACE
Min. TH 23 mm
Weight 7 Kg
Type DA