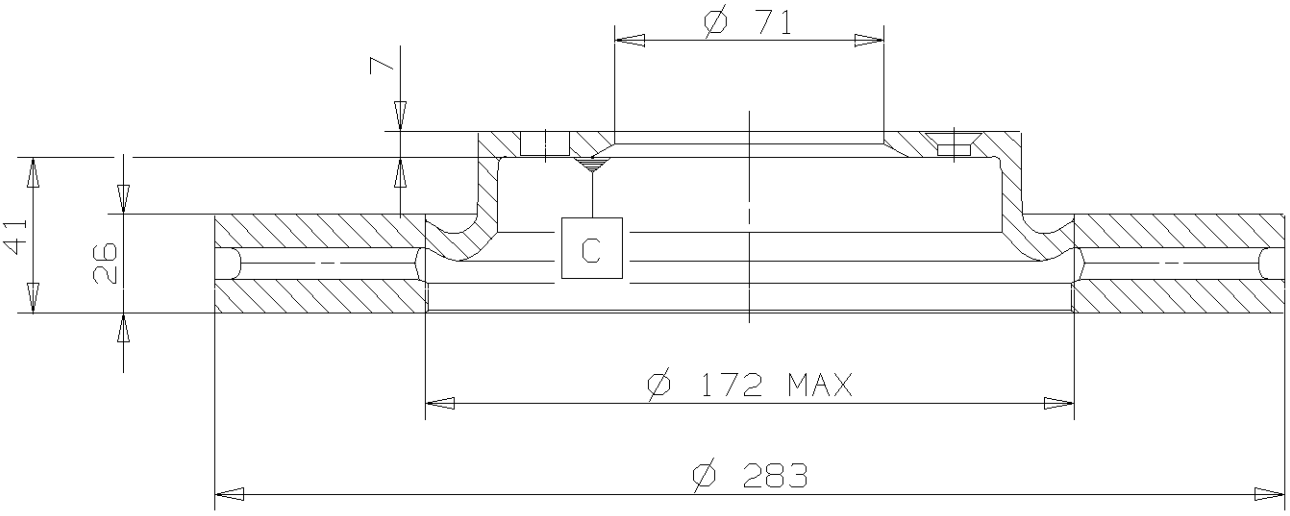

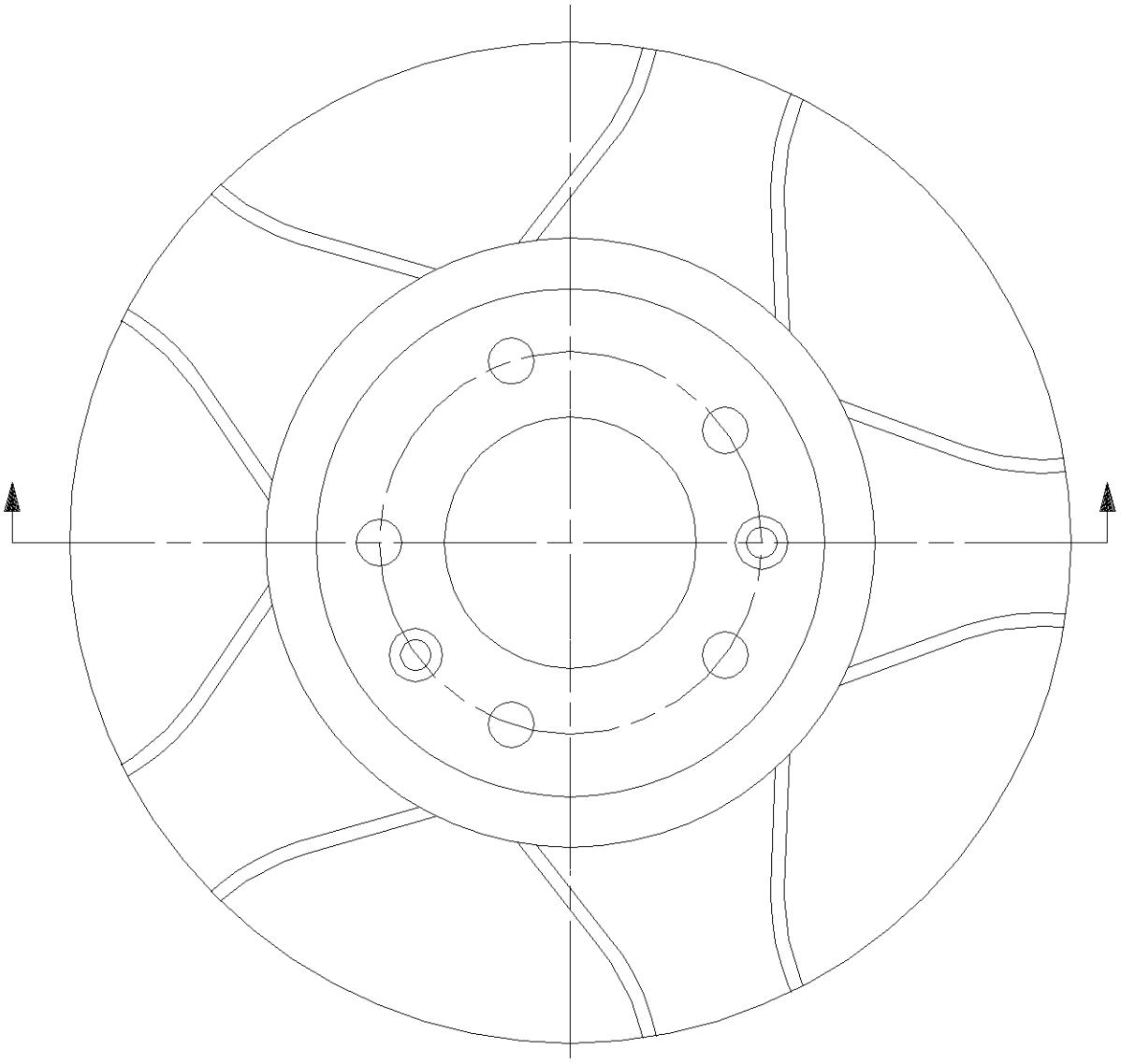

C MOUNTING FACE
Min. TH 24 mm
Weight 7.1 Kg

INTERCHANGEABLE WITH
09.8303.10