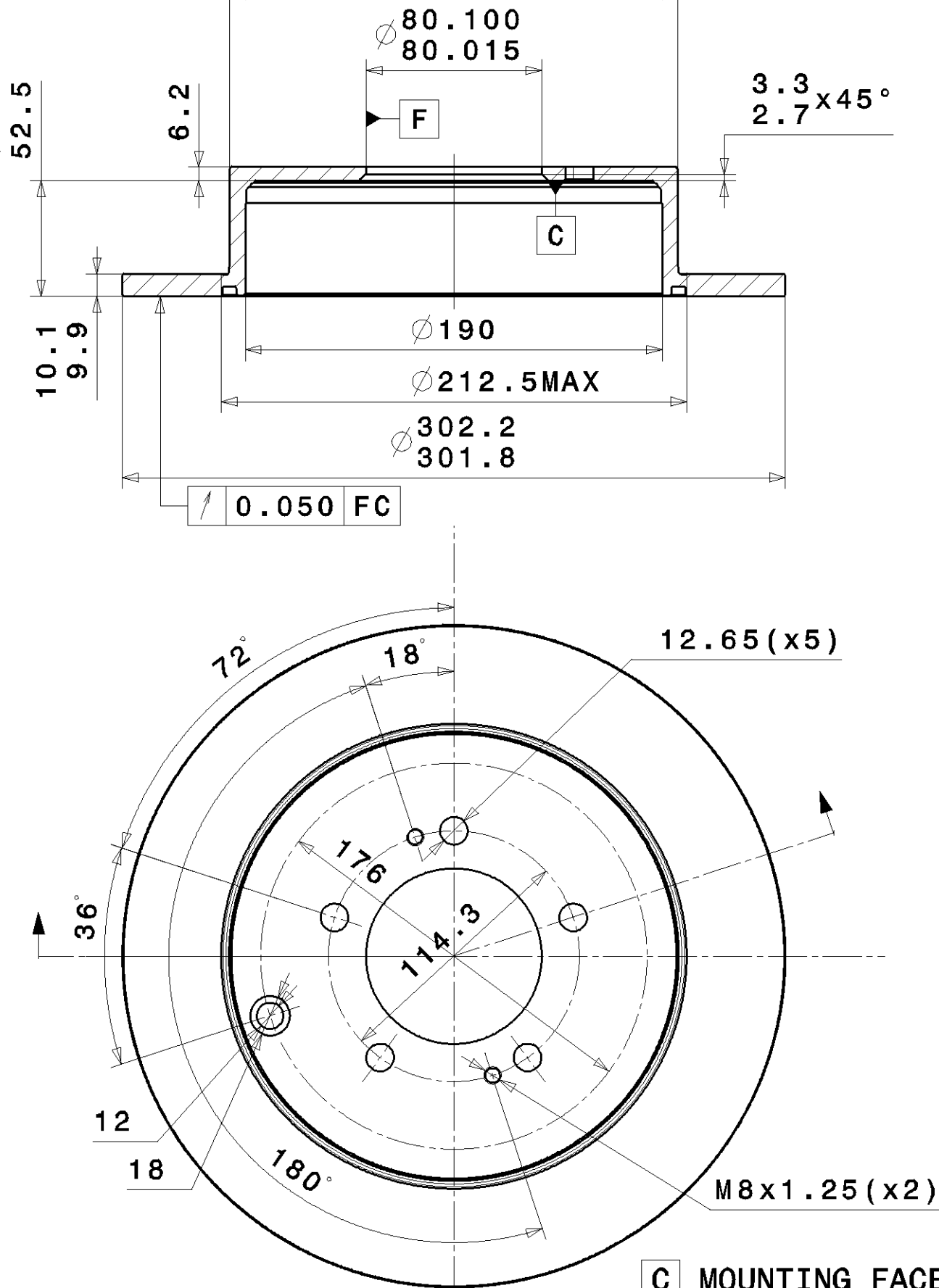
∅80.100
80.015
F
C
52.5
6.2
3.3
2.7
x45°
10.1
9.9
∅190
∅212.5MAX
∅302.2
301.8
0.050 FC
72°
18°
12.65(x5)
176
114.3
36°
12
18
180°
M8x1.25(x2)
C MOUNTING FACE