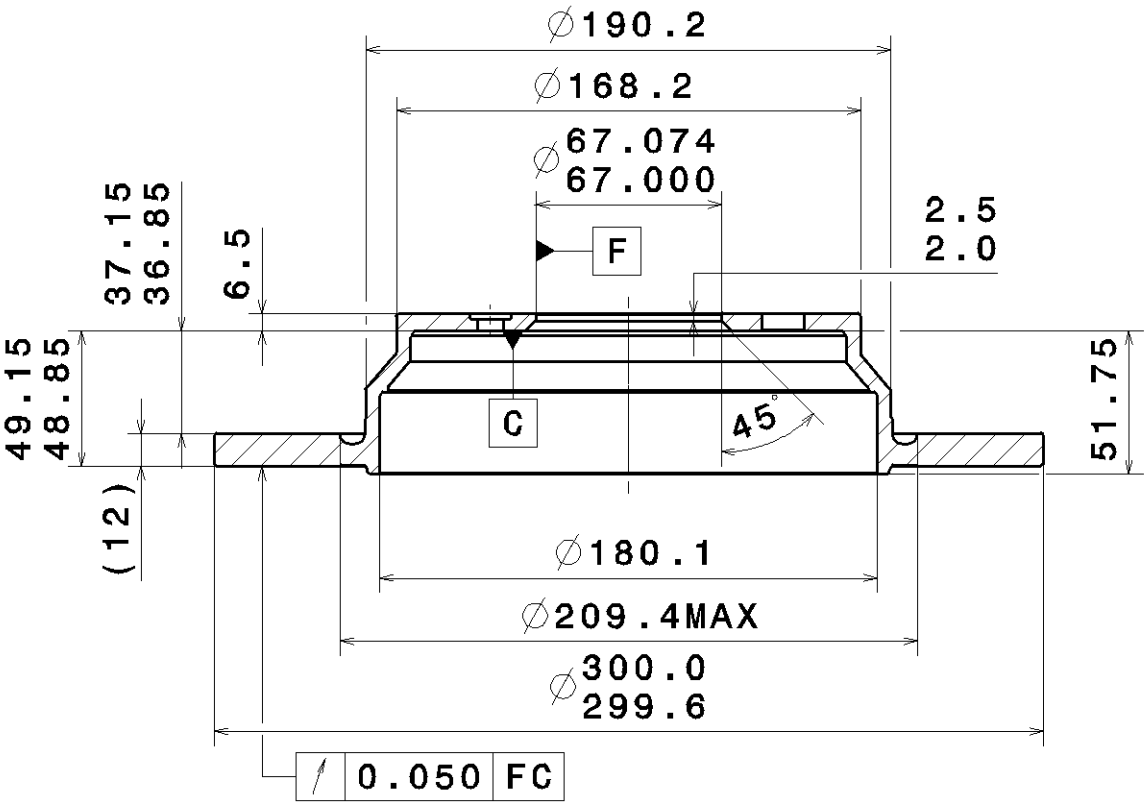

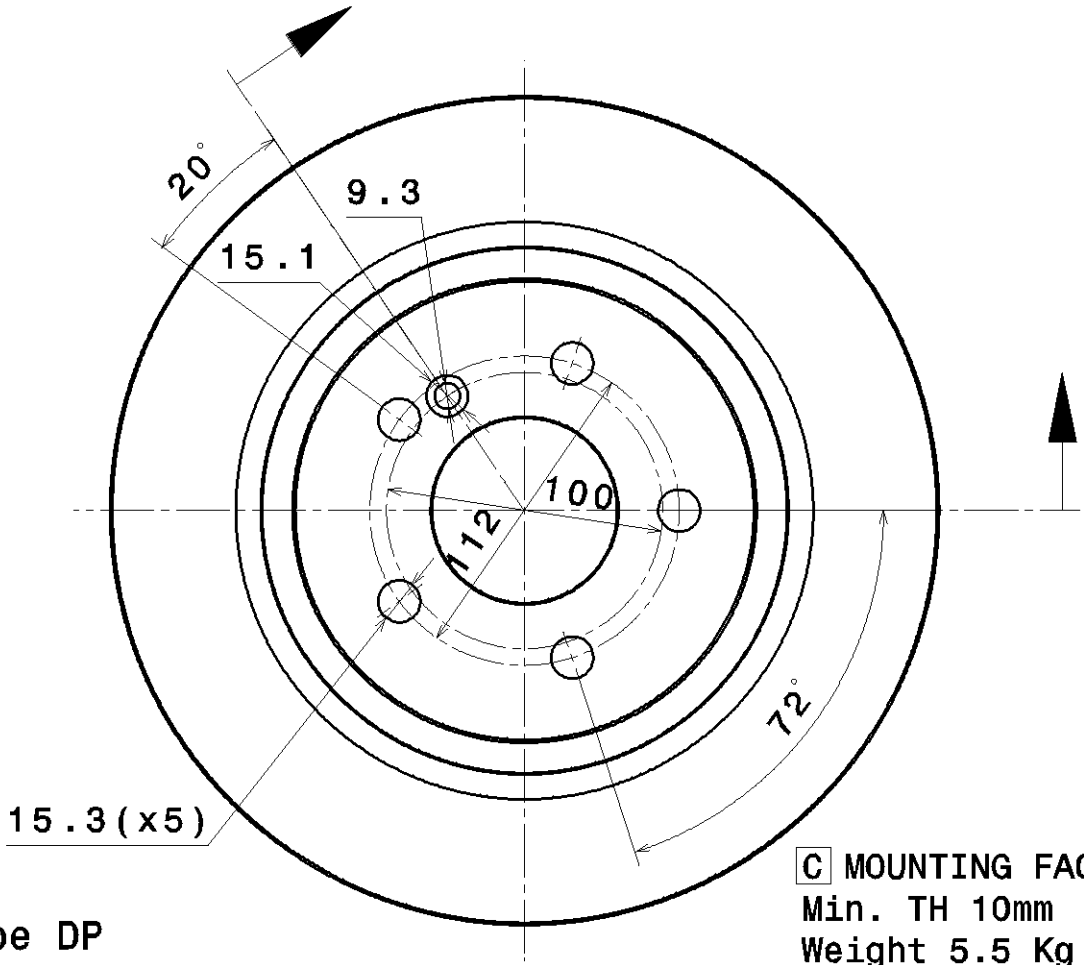

C MOUNTING FACE
Min. TH 10mm
Weight 5.5 Kg

Type DP