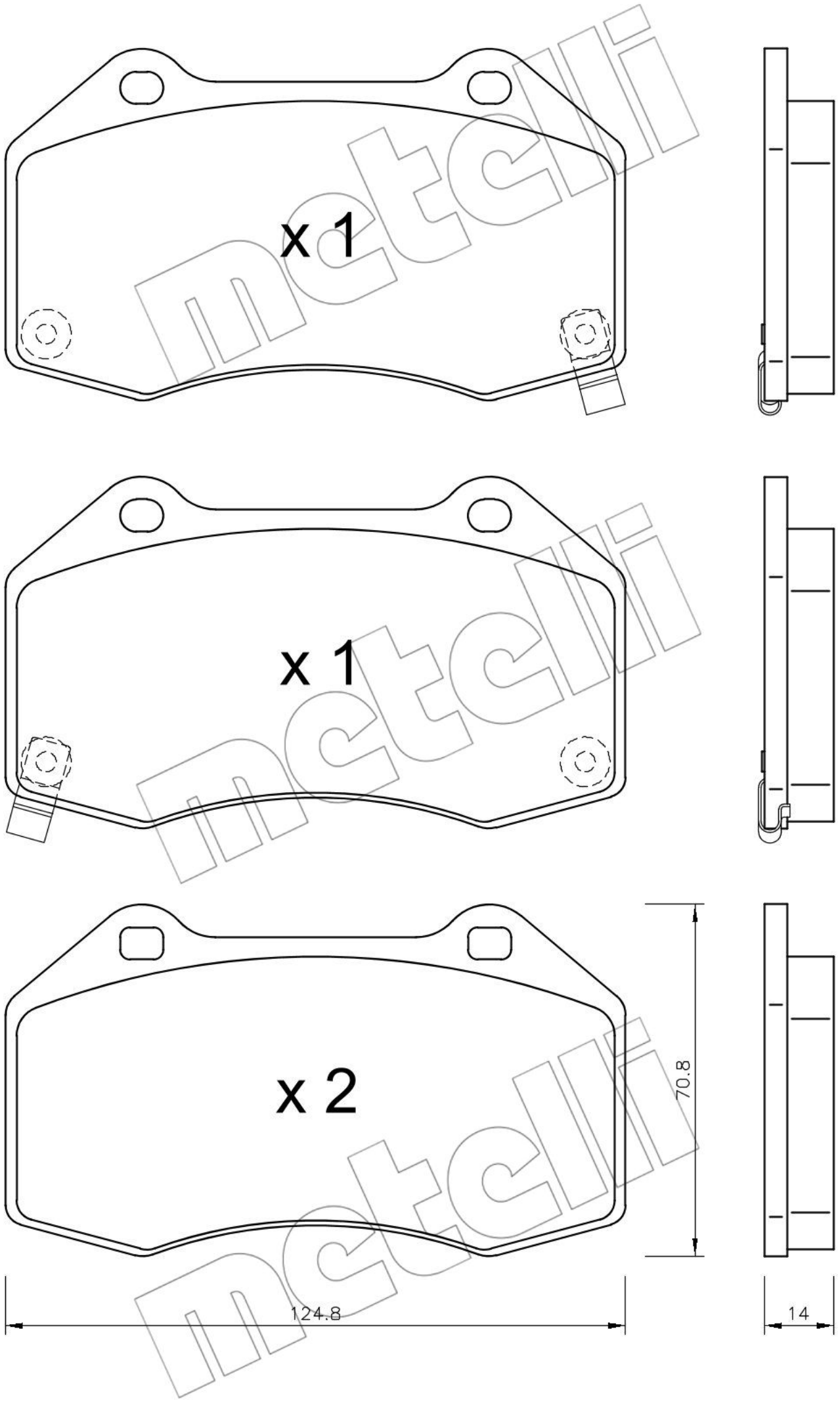
x 1
x 1
x 2
70.8
124.8
14